PRO:HIKER 2. Assembly Instructions

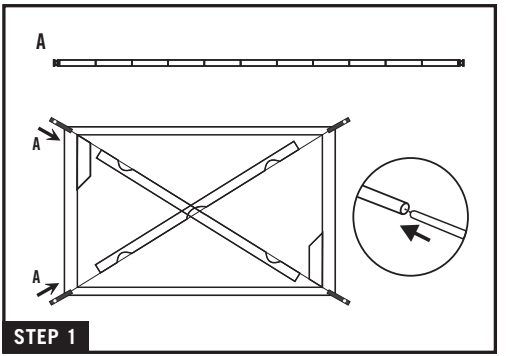

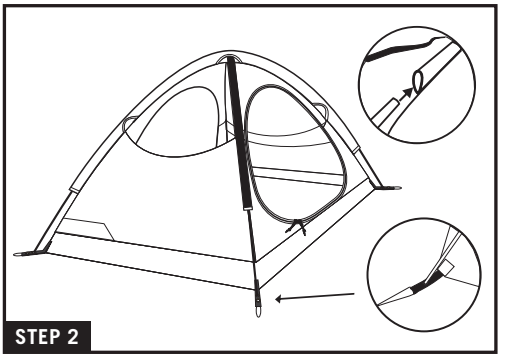

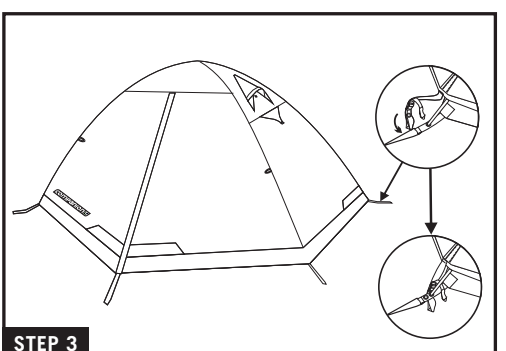

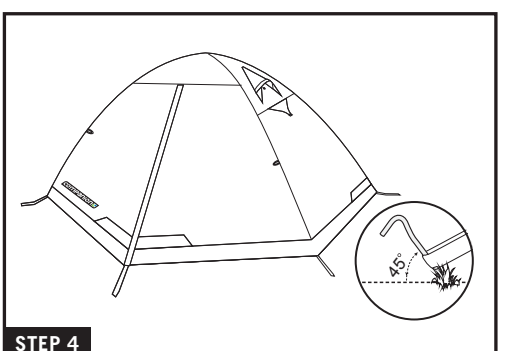

COMPONENTS:



